W12CY001
E0021

The W12CY001 is a 12cm (4,5") cone driver developed for use as a high fidelity woofer/ midrange unit. The extremely stiff, yet light cone gives tremendous bass precision and midrange detail.

Precision cast and surface treated magnesium cone coupled to a natural rubber surround showing no sign of midrange (edge) resonances.

Heavy copper rings mounted above and below the T-shaped pole piece reduce non linear and modulation distortion and increase overload margin. A solid copper phase plug, enhance the effect of the copper rings and improves heat conduction away from the pole piece.

An extra large magnet system for good sensitivity and transient response.

Extremely stiff and stable injection moulded metal basket keeps the critical components in perfect alignment. Large windows in the basket both above and below the spider reduce sound reflexion, air flow noise and cavity resonance to a minimum.

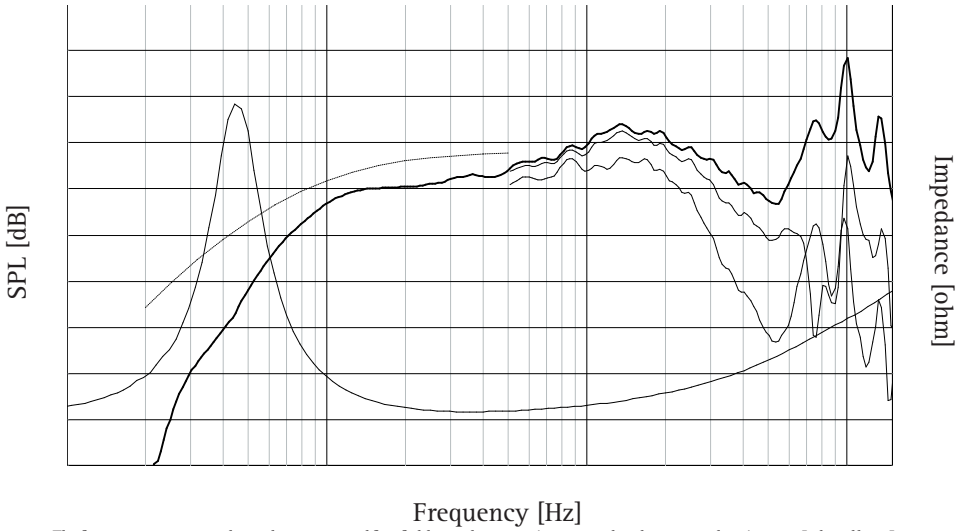

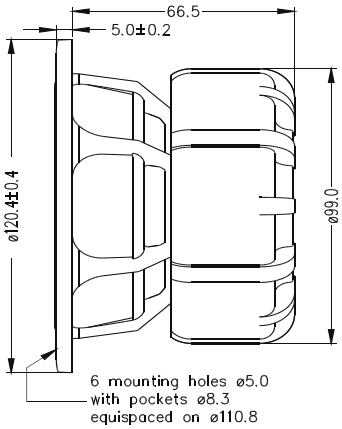

The frequency responses above show measured free field sound pressure in 0, 30, and 60 degrees angle using a 2.5L closed box. Input 2.83 VRMS, microphone distance 0.5m, normalized to SPL 1m.The dotted line is a calculated response in infinite baffle based on the parameters given for this specific driver. The impedance is measured in free air without baffle using a 2V sine signal.

Nominal Impedance	8 Ohms	Voice Coil Resistance	5.6 Ohms
Recommended Frequency Range	60 - 3500 Hz	Voice Coil Inductance	0.43 mH
Short Term Power Handling *	200 W	Force Factor	5.4 N/A
Long Term Power Handling *	70 W	Free Air Resonance	45 Hz
Characteristic Sensitivity (2,83V, 1m)	84.0 dB	Moving Mass	7.5 g
Voice Coil Diameter	26 mm	Air Load Mass In IEC Baffle	0.21 g
Voice Coil Height	12 mm	Suspension Compliance	1.7 mm/N
Air Gap Height	6 mm	Suspension Mechanical Resistance	0.87 Ns/m
Linear Coil Travel (p-p)	6 mm	Effective Piston Area	50 cm^2
Maximum Coil Travel (p-p)	9 mm	VAS	6 Litres
Magnetic Gap Flux Density	1.1 T	QMS	2.50
Magnet Weight	0.42 kg	QES	0.42
Total Weight	1.21 kg	QTS	0.36

SEAS reserves the right to change technical data

RoHS compliant product www.seas.no